RONAN ENGINEERING COMPANY

Model #125(115)-24/125-500SCP

Single Input/Dual Output Power Supply

These power supplies are an ideal choice for most process instrumentation applications requiring a high power Dual Output 24 and 125 VDC.

- **Simple High Reliability Design**
- **Switching Type, AC or DC Input**
- **Surface Mount NEMA 1 enclosure**
- **Screw Terminal Connections**

ISO 9001
REGISTERED

Specifications:
1. Input Power: 115 VAC OR 125 VDC
2. Relay: **DPDT** Two(2) Relays For Failure Contacts
3. Output
   - V1: 24VDC @ 20AMPS
   - V2: 125VDC @ 1AMPS
   - V1 and V2 Isolated Outputs
4. Maximum Capacity: 500W
5. Three(3) Indicator Lights
   - One(1) for Input
   - One(1) for V1 Output
   - One(1) for V2 Output
6. Weight: 23 lbs

Mechanical Detail

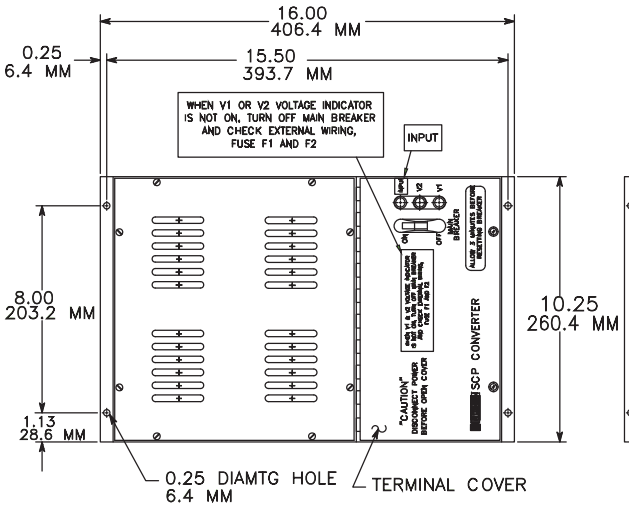

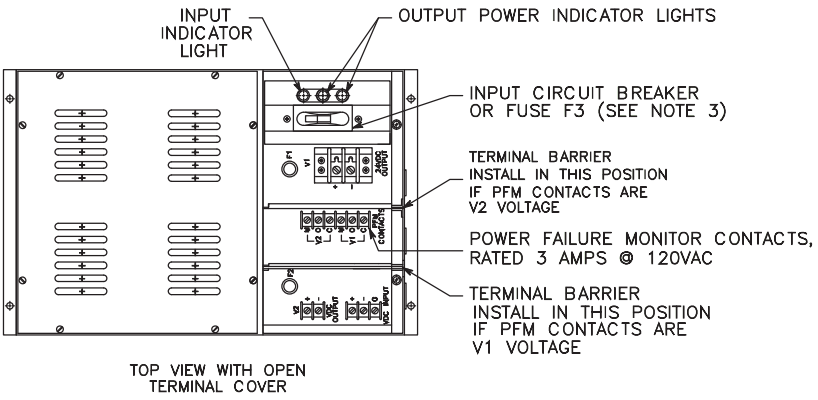

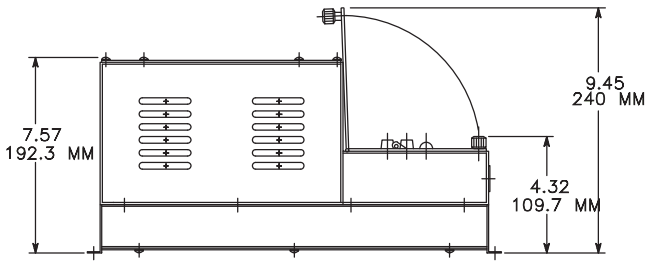

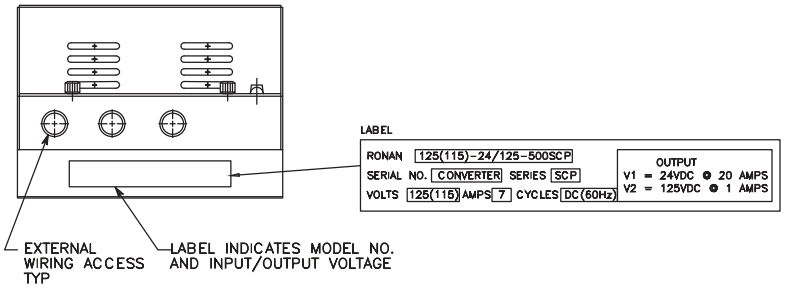

Specifications apply at 23 +/-2° C (74 +/2° F) unless otherwise specified, and are subject to change without notice.